Arab Academy for Science, Technology & Maritime Transport
College of Engineering and Technology
Final Examination Paper

Department: Computer Engineering
Course Title: Microprocessors Systems
Course Code: CC421
Lecturer: Dr. Hesham El Zouka & Dr. Cherine Fathy

Date: 26th of January 2021
Time allowed: 2 Hours
Marks: 40

Final Exam

Notes for Students:

- **Kindly start by writing your Full name and Registration number on the cover page.**
- **Kindly attach a copy of your Student/ National ID to your submitted file.**
- **Carefully number your answer papers and write the question number on the answer sheet.**
- **Your answers to the exam questions must be uploaded to Moodle no later than 2:45 pm. 26/1/2021.**

Answer only FOUR questions of your choice, all questions carry equal marks.
Show your work so that partial credits may be assigned

Question #1 (10 points): (ILO: A2 , B2, B3, Outcome 1)

(Q1.1) *(2 points)* Show how the flag register is affected by the addition of A5C2H and 9A3EH.

(Q1.2) *(3 points)* ***Indicate*** whether or not the jump happens in each case. Show your work.

1) ;from the code segment
```
CLC
MOVAH, 55H
XOR  BL, BL
XOR  BL, AH
MOV CL, 03H
AND  CL, 0FH
SHR   AH, CL
JNC TARGET
```

2) ;from the code segment
```
CLC
MOV AL, 2
SUB AL, 0FFH
JC TARGET
```

(Q1.3) *(5 points)* Write an assembly program that compares two arrays of integers, if they are identical, the program should print "Matched", otherwise print "Not Matched".

Question #2 (10 points) (ILO A2, Outcome 1)

(Q2.1) (4 Points) **Write a single logical instruction to replace each of the following:**

a. Clear the odd numbered bits in AX to 0
b. Inverts bit number 0,4, 8, 12 in AX
c. Set the least significant nibble in AX to 1
d. Divide the contents of AX by 2

(Q2.2) (6 Points) **For the program shown below:**

a. State the function of this program.
b. Determine the memory contents of the 5 consecutive bytes starting from offset input after the execution of this program.
c. Determine the CF after execution of line 14
d. Determine the addressing mode of line 17.

```
1.  . DATA
2.  Input DB 99H,12H,56H,45H,36H
3.  .Code
4.  MAIN PROC FAR
5.  MOV AX, @DATA
6.  MOV DS, AX
7.  MOV CH, 04H
8.  UP2: MOV CL, 04H
9.          MOV SI, offset Input
10. UP1:MOV AL,[SI]
11.         MOV BL, [SI+1]
12.         CMP AL, BL
13.         JNC DOWN
14.         MOV DL, [SI+1]
15.         MOV AH, [SI]
16.         MOV [SI], DL
17.         MOV [SI+1], AH
18. DOWN: INC SI
19.             DEC CL
20.             JNZ UP1
21.             DEC CH
22.             JNZ UP2
23. MOV AH, 4CH
24. INT 21H
25. MAIN ENDP
26. END MAIN
```

Question #3 (10 points) – (ILO: B2, B3, Outcome 2):

(Q3.1) *(5 points)* **Indicate whether each of the following statements is TRUE or FALSE and correct the false ones:-**

1- If the crystal oscillator is operating at 30 MHz, the PCLK output of the clock generator is 16MHZ and OSC is 10 MHz.
2- If the 8087 math coprocessor is not available, the 8086 is operated in a MAX mode.
3- If a CPU has a thirty-two Bit address bus, the maximum amount of memory that can be addressed is 24 MB.
4- The HOLD and HOLDA are required in order to allow the DMA controller to take over control of the bus from the microprocessor.
5- While memory contains both code and data, ports contain data only

(Q3.2) *(5 points)* Trace the following instructions:-

1)
```
MOV DX, 2345H
MOV BX, 4199H
MOV AL,BL
SUB AL, DL
DAA
```

2)
```
MOV EAX,4
MOV CL, 7
MUL CL
AAM
```

3)
```
XOR AH, AH
MOV AL, '6'
ADD AL, '7'
AAA
OR AL, 30H
```

4)
```
MOV AL, 66H
AND AL, 2FH
OR AL, C3 H
NEG AL
XOR AL, 0FH
NOT AL
```

5)
```
MOV AL, 12H
CBW
CWD
MOV CL, 03H
DIV CL
```

Question #4 (10 points): (ILO: B3, Outcome 1)

(Q4.1) *(5 points)* Answer the following short questions in no more than two lines for each:

1. Find the capacity, address, and data pins for the 32K x 8 ROM memory organization.
2. A 512K memory chip has 8 pins of data. Find the number of address pins.
3. What is the difference between TEST pin and READY pin in 8086?
4. State the function of the following signals: BHE and NMI.
5. What is the advantage of EEPROM over EPROM?

(Q4.2) *(2 points)* Find the memory organization and chip capacity for the following EPROM device:

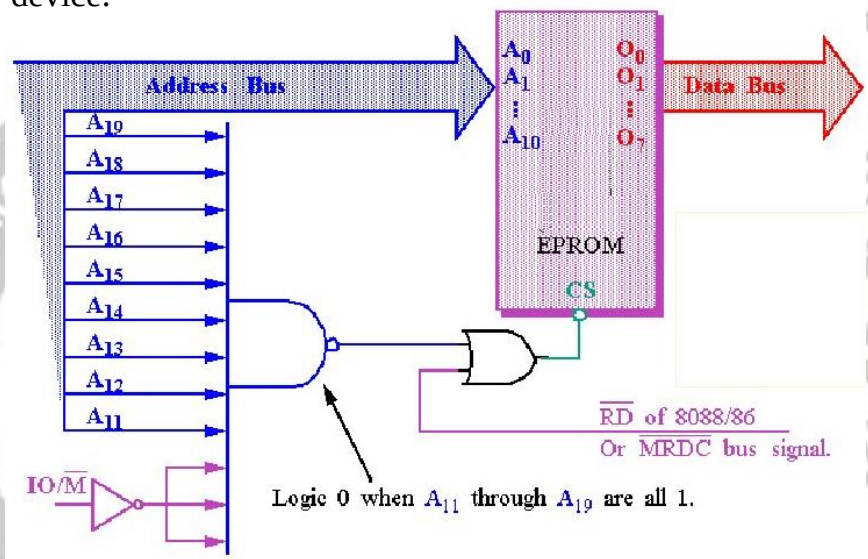

(Q4.3) *(3 points)* Find the address range for *X_4 and X_7* of the 74LS138 for the following design:

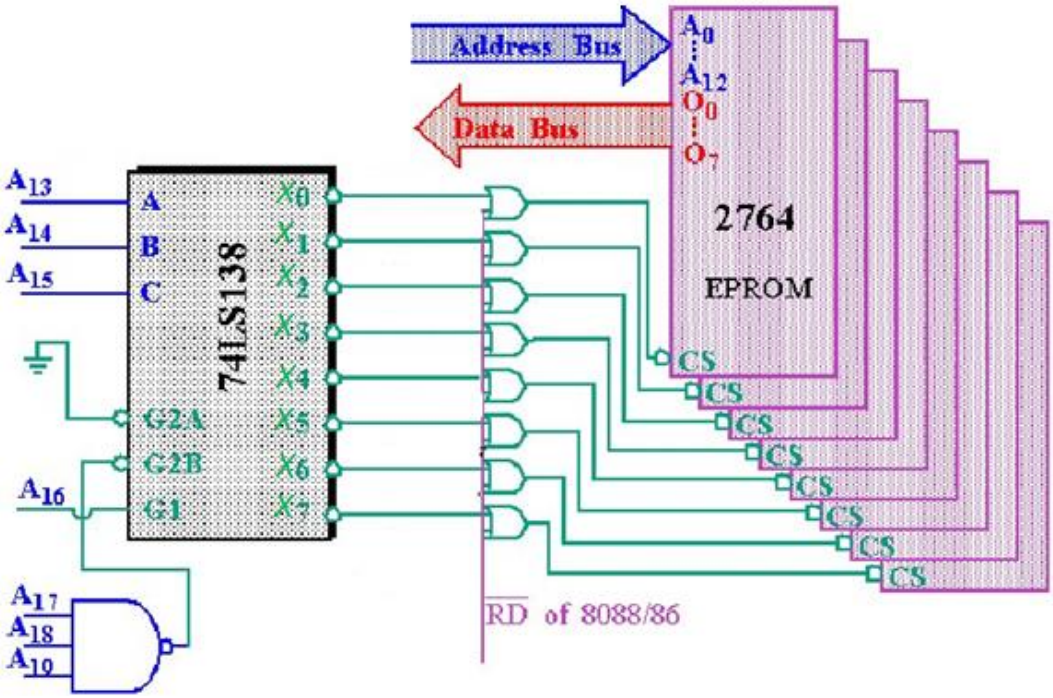

Question #5 (10 points) (ILO A1, B2, Outcome 1)

(Q5.1) **Questions on I/O 8255** *(5 points)*

a. Find the port addresses assigned to A, B, C and the control register.
b. Find the control byte for this configuration.
c. Write assembly language instructions to monitor port A continuously for a temperature of 100 degree. If it reaches 100, it should be saved in register Bl and AAH is sent to port B and 55 H is sent to port C.

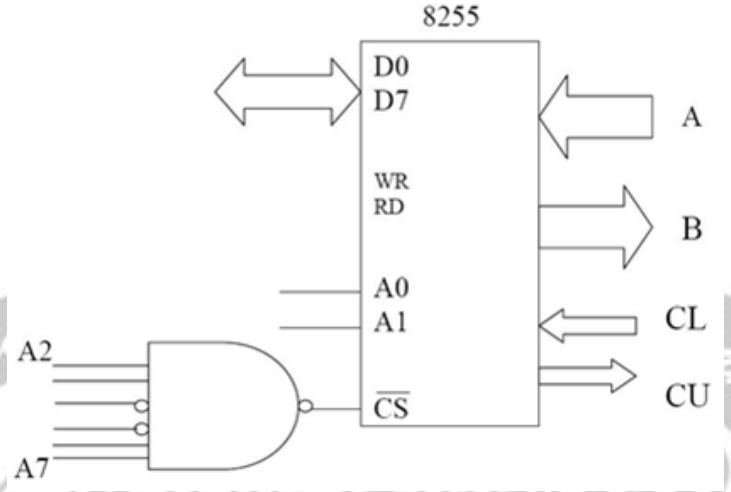

(Q5.2) *(5 points)* **Identify the letter of the choice that best completes the statement or answers the question. Show your work.**

1. In case of division of doubleword by word, the numerator is in _____register and the quotient is in _____register.
   a. BX, AX
   b. AX, DX
   c. DXAX, DX
   d. DXAX, AX

2. If CS = 24F6H, SS = 0801H, SI = 0100H and IP = 634AH, the physical address of the next instruction to be executed is:
   a. 83DAEH
   b. 2B2AAH
   c. 83DA0H
   d. None of the above

3. Assume that the current value of CS:IP is 0702:2345 and a jump to address 0802:2323 is executed then the jump is:
   a. A NEAR jump
   b. A FAR jump
   c. An illegal jump
   d. None of the above

4. If ES = D321H, then the range of physical addresses for the extra segment is:
   a. 00000H – 0D321H
   b. D3210H – D321FH
   c. D3210H – E320FH
   d. 0D321H - 1D320H

5. For the instruction MOV [SI]+12, CL, Given CX=7E3DH, SS= 1290H, BP= 3290H, SI= 1234H, DS=23FAH, the physical address of the memory location where the operand is stored:
   a. 16DD6
   b. 1A750
   c. 251E6, 251E7
   d. 251E6

Question #6 (10 points) (ILO B2, Outcome 1)

(Q6.1) *(5 points)* Use the decoder 74138 to map 32kb of memory starting from address F8000H to FFFFFH into eight 4K x 8 EPROM Chips. Draw the circuit and indicate the start and the end addresses accessible through each EPROM.

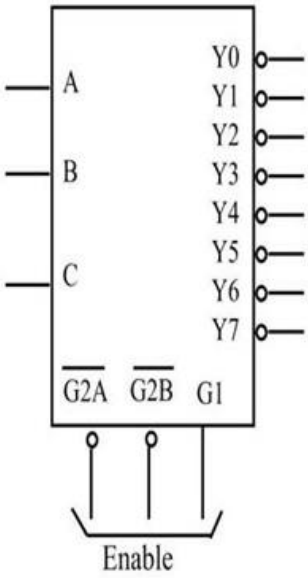

Figure 2: Block Diagram of 74LS138 Decoder

(Q6.2) *(3 points)* **For the design shown below, specify the following:**

a. The address range.
b. The memory capacity and organization of the chip.
c. The Type of memory chip: RAM or ROM.

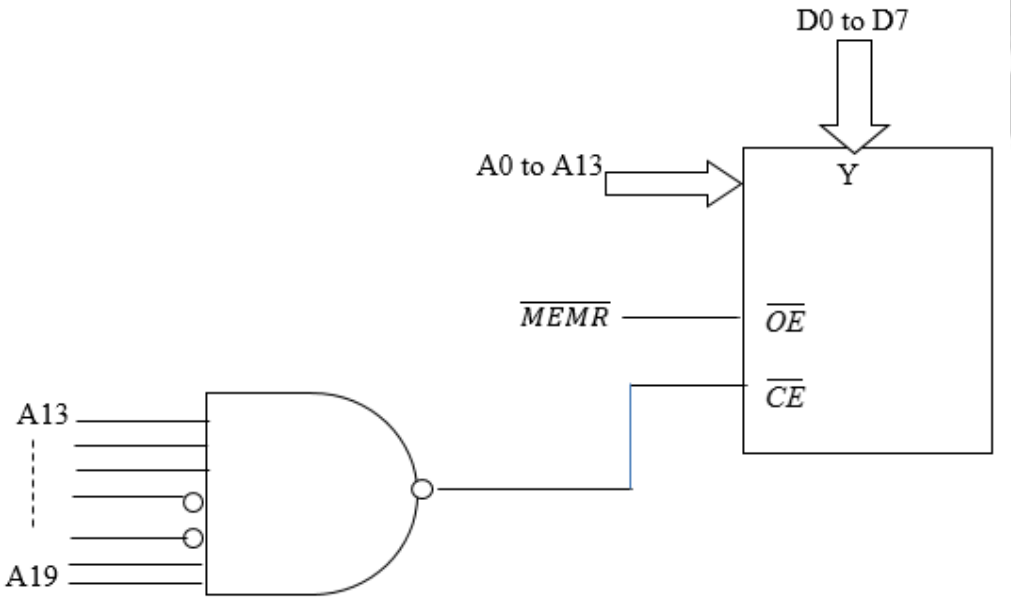

(Q6.3) *(2 points)* **Specify NV-RAM chip internal components.**

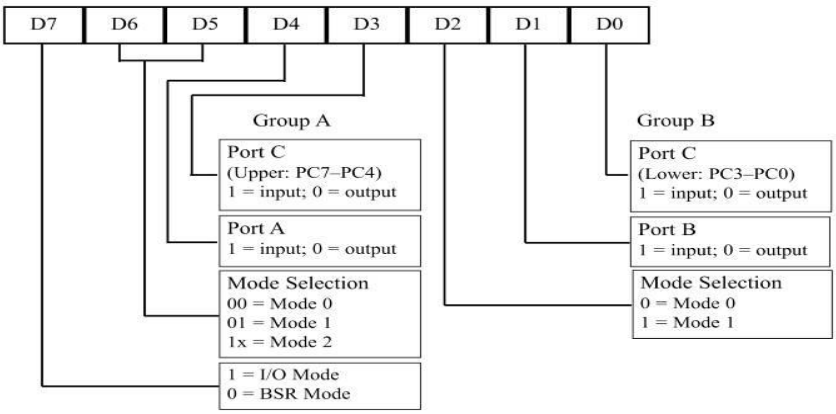

Figure 1: 8255 Control Word Format (I/O Mode)

Good Luck.

Arab Academy for Science, Technology and Maritime Transport
College of Engineering and Technology
Computer Engineering